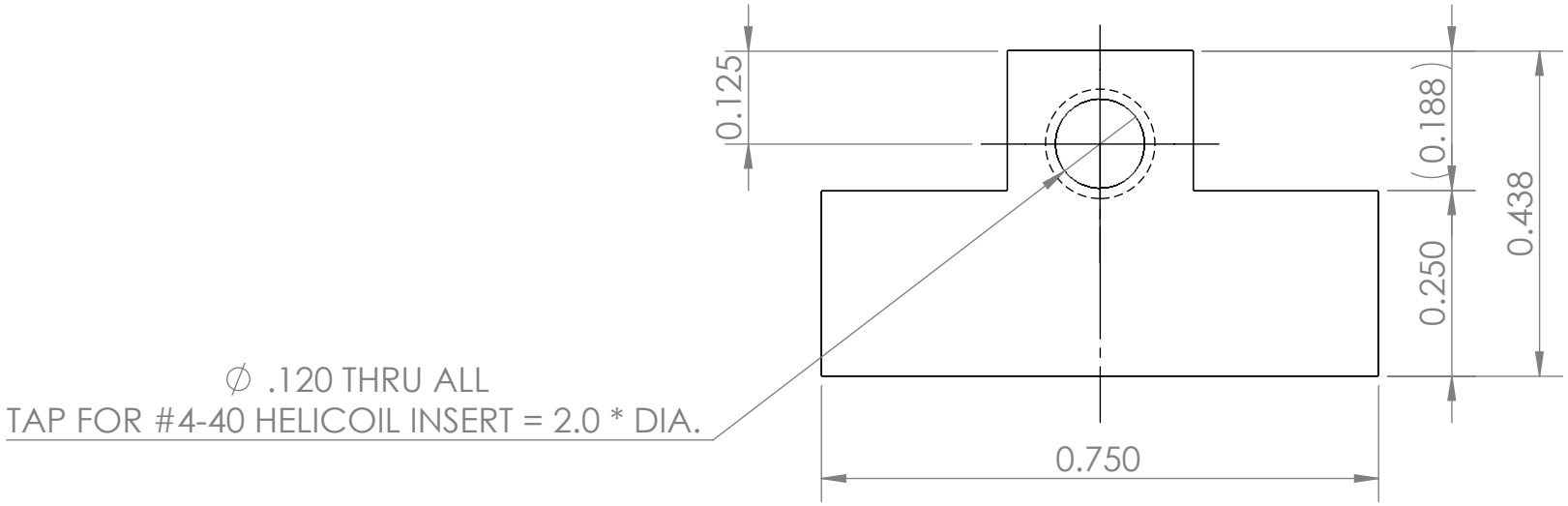

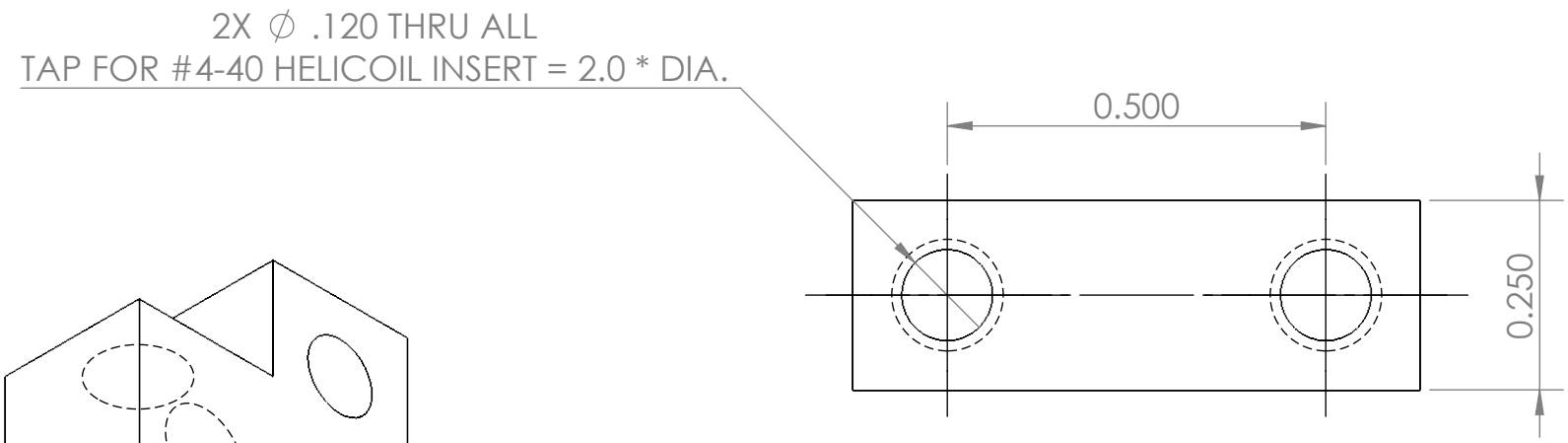

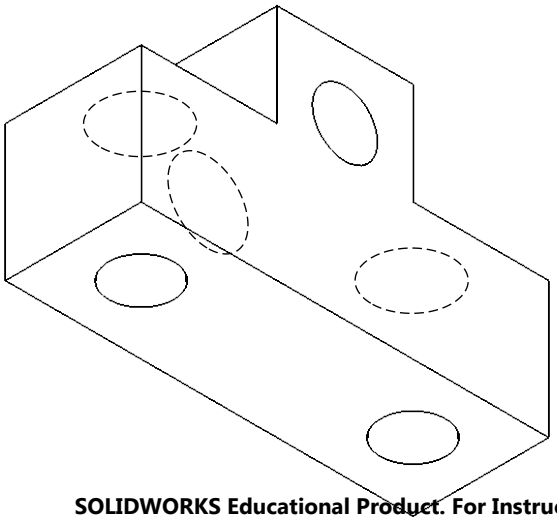

SOLIDWORKS Educational Product. For Instructional Use Only

	NAME	DATE
DRAWN	Joe S.	2/21/2018
CHECKED	--	
ENG APPR.	--	
MFG APPR.	--	

Description:
bracket for securing a camera/umbilical bulkhead in LV3

UNLESS OTHERWISE SPECIFIED:
DIMENSIONS ARE IN INCHES
TOLERANCES:
FRACTIONAL ± 1/32
ANGULAR: MACH ± BEND ±
TWO PLACE DECIMAL ±.01
THREE PLACE DECIMAL ± .001

MATERIAL
6061-T6 aluminum
FINISH
as machined
Weight
DO NOT SCALE DRAWING

COMMENTS:

DWG. NO.
--

REV
v0.4

SIZE
A

SCALE: 4:1

SHEET 1 OF 1